IMCO

05-8060
IMCO Trim Rams
Stainless Steel Clamps

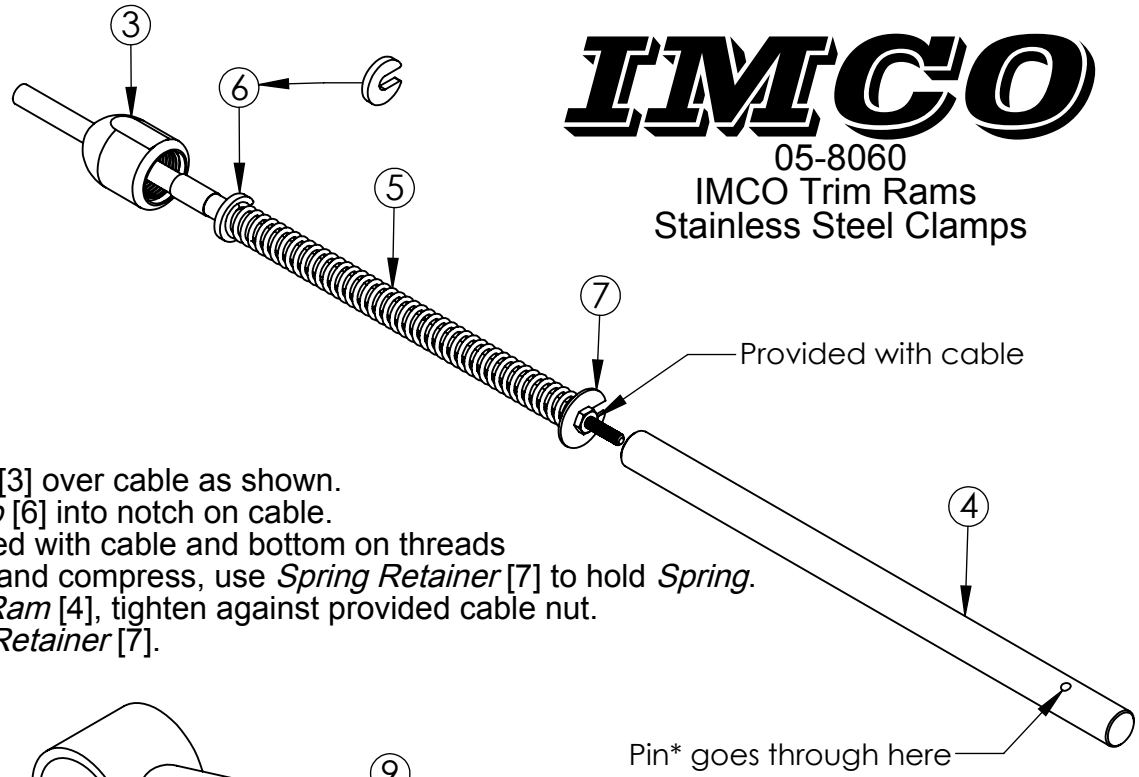

1. Place *Cable Nut* [3] over cable as shown.
2. Insert *Spring Clip* [6] into notch on cable.
3. Install nut provided with cable and bottom on threads
4. Install *Spring* [5] and compress, use *Spring Retainer* [7] to hold *Spring*.
5. Install *Indicator Ram* [4], tighten against provided cable nut.
6. Remove *Spring Retainer* [7].

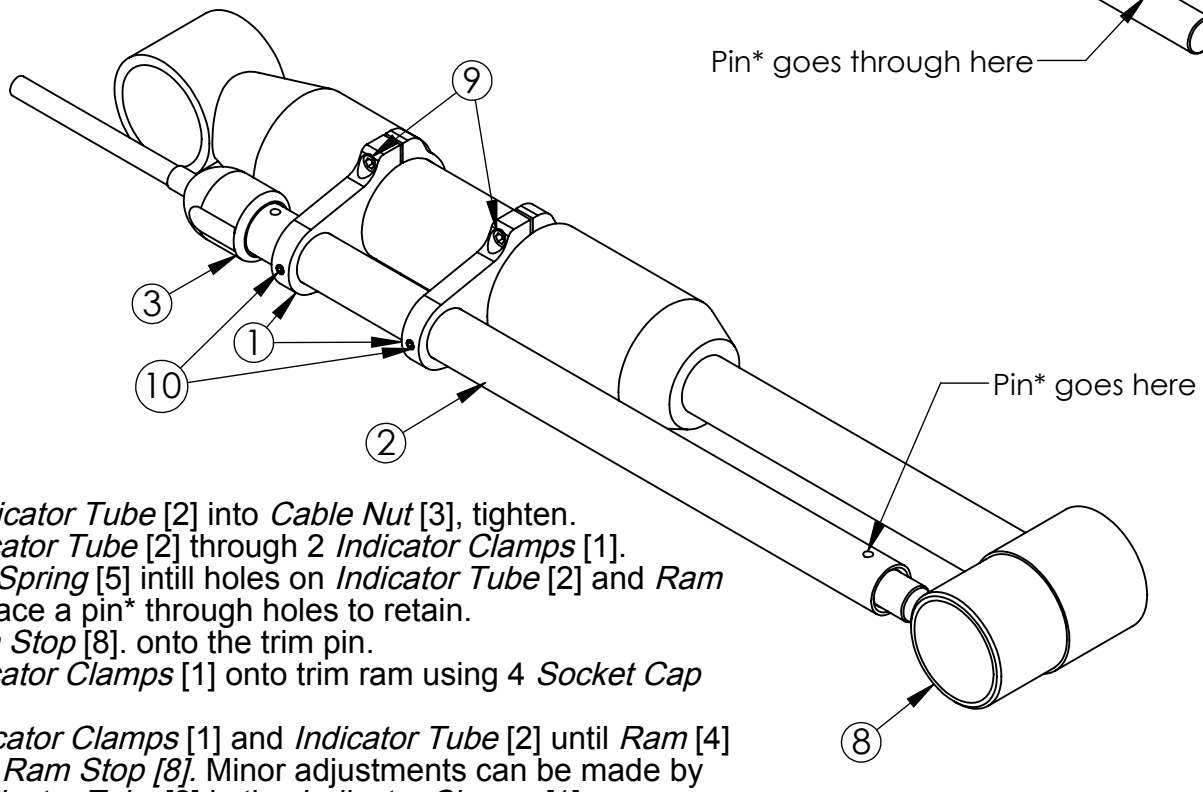

1. Thread *Indicator Tube* [2] into *Cable Nut* [3], tighten.
2. Install *Indicator Tube* [2] through 2 *Indicator Clamps* [1].
3. Compress *Spring* [5] intill holes on *Indicator Tube* [2] and *Ram* [4] aline, place a pin* through holes to retain.
4. Install *Ram Stop* [8]. onto the trim pin.
5. Install *Indicator Clamps* [1] onto trim ram using 4 *Socket Cap* Screws [9].
6. Adjust *Indicator Clamps* [1] and *Indicator Tube* [2] until *Ram* [4] is touching *Ram Stop [8].* Minor adjustments can be made by moving *Indicator Tube* [2] in the *Indicator Clamps* [1].
7. Once final adjustments are made tighten *Socket Cap Screws* [9] and install *Socket Set Screws* [10] with provided locktite.

05-8060			
Item	Description	Qty	Part Number
1	Indicator Clamp	2	05-6007
2	Indicator Tube	1	05-6008
3	Indicator Cable Nut	1	05-6009
4	Indicator Ram	1	05-2038
5	Indicator Spring	1	05-6006
6	Spring Clip	1	05-6010
7	Tempory Spring Retainer	1	05-9001
8	Ram Stop	1	05-6018
9	10-24 x 5/8" Socket Cap Screw	4	08-060403051
10	10-24 x 3/16" Socket Set Screw	2	08-050403021

510 East Arrow Hwy
San Dimas, CA 91773
(800) 899-8058
(909) 592-6162
www.imcomarine.com
info@imcomarine.com